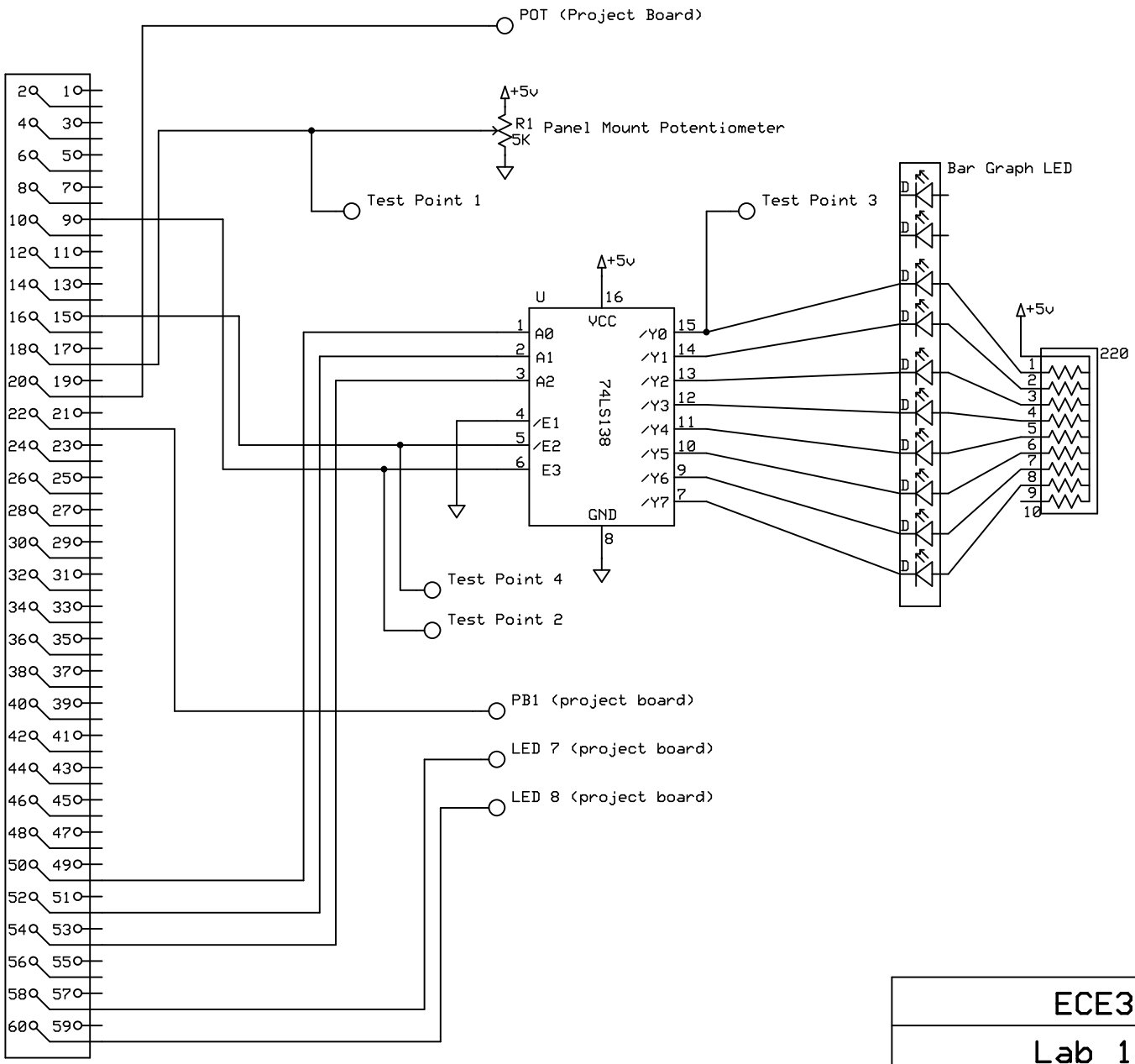

ECE348		
Lab 10 Schematic		
348 Staff	Rev 2.0 10/27/2009	Page 1